This announcement is based on product catalogue information previously shown before its discontinuation.
Product information of the existing product may be different from this version.

OMRON

Panel seal Rocker Switch

A8W

Panel Seal Rocker Switch for High Capacity Switching

- Miniature size with High current 16A switching.
- Easy to mount by snap fitting.
- Dust & waterproof construction with panel seal (Equivalent to IP67 (IEC-60529)).
- UL, cUL and TV-8 standard approved. Conforms to EN standards.

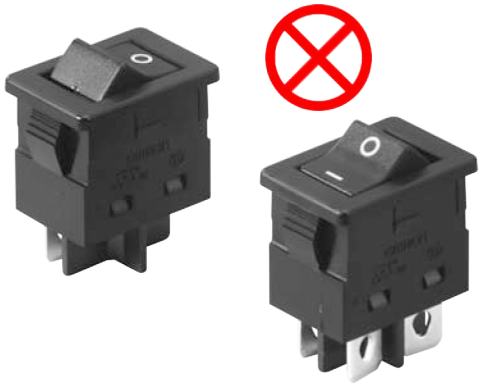

RoHS Compliant

⚠ Caution
Refer to Precautions

■List of Models

Contact Form		SPST		DPST		Quantity per package
		2 — 3		2 — 3 5 — 6		
Color of caps and cases		Black	White	Black	White	
Marking on caps	I O	A8WS-1162	A8WS-2262	A8WD-1162	A8WD-2262	100
	— O	A8WS-1163	A8WS-2263	A8WD-1163	A8WD-2263	

■Ratings

Rated load	Non-inductive	Inductive	
	Resistive load	Inductive load	Motor load
125 VAC	16A	16A	10A
250 VAC	16A	16A	10A

Note: 1. The inductive load has a power factor of 0.7 minimum (AC).
2. The motor load has an impulse current 6 times the normal current.
3. The above ratings were tested under the following conditions:
(1) Ambient temperature: 20±2 °C
(2) Ambient humidity: 65±5 %RH
(3) Switching frequency: 7 times/min.

■Approved Safety Standards

UL, cUL (UL1054/CSA C22.2 No. 55)

16A 125 VAC, 16A 250 VAC, TV-8

DEMKO (EN61058-1)

16A 125 VAC, 16A 250 VAC

Note: Quick connect terminals are not in compliance with IEC standards.

■Characteristics

Permissible operating frequency	**Mechanical**	20 operations / min max.
	Electrical	7 operations / min max.
Insulation resistance		100 MΩ min. (at 500 VDC with insulation tester)
Contact resistance (initial value)		20 mΩ max. (6 to 8 VDC, 1 A, voltage drop method)
Dielectric strength	**Between terminals of the same polarity**	2,000 VAC 50/60Hz, for 1min
	Between terminal and case ground	4,000 VAC 50/60Hz, for 1min
Vibration resistance	**Malfunction**	10 to 55 Hz, 1.5-mm double amplitude
Shock resistance	**Malfunction**	1,000 m/s^2 max.
Durability	**Mechanical**	50,000 operations min.
	Electrical	10,000 operations min.
Inrush current		117 A max.
Degree of protection		Panel seal IEC IP67
Ambient operating temperature		- 25 to +55 °C (at ambient humidity of 60 % max.) (with no icing or condensation)
Ambient operating humidity		25 to 85 %RH (at +15 to 35 °C)
Weight		7.8 g (SPST), 9.3 g (DPST)

This announcement is based on product catalogue information previously shown before its discontinuation.
Product information of the existing product may be different from this version.

■Dimensions (Unit: mm)

A8WS-1162
A8WS-1163
A8WS-2262
A8WS-2263
A8WD-1162
A8WD-1163
A8WD-2262
A8WD-2263

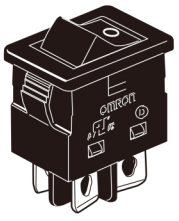

Note: The following illustrations and drawings are for 2 poles (DPST) models, 1 pole (SPST) models have single side terminals.

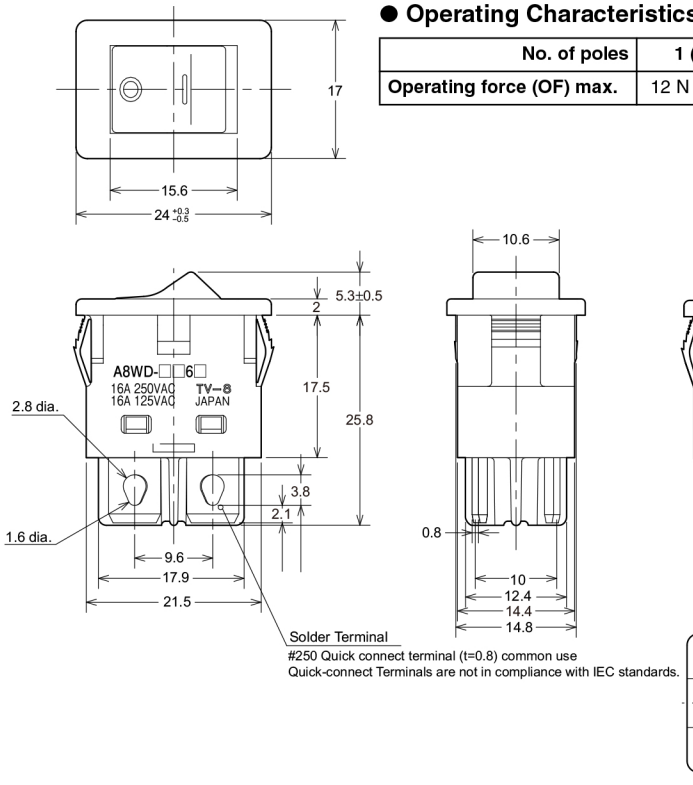

● Operating Characteristics

No. of poles	1 (SPST)	2 (DPST)
Operating force (OF) max.	12 N {1,224 gf}	23 N {2,345 gf}

Note: Unless otherwise specified, a tolerance of ±0.3 mm applies to all dimensions.

■Panel Cutout

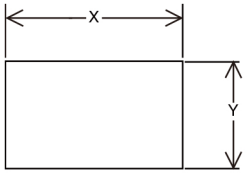

	Panel thickness (mm)	X (mm)	Y (mm)
Without rubber cap	1.0 to 1.9	$22.3^{+0.1}_{0}$	$14.8^{+0.1}_{0}$
	2.0 to 2.8	$23.2^{+0.1}_{0}$	
With rubber cap	$2.0^{0}_{-0.07}$	$22.4^{+0.1}_{0}$	

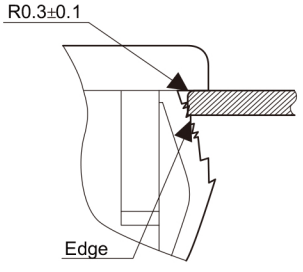

Process the above-mentioned R on the mounting hole side of panel, or be sure that the Play R is on the operation side of panel when using.
Be sure that the Edge is on the reverse side of panel when processing.

This announcement is based on product catalogue information previously shown before its discontinuation.
Product information of the existing product may be different from this version.

■Optional Accessories (Sold separately)

Rubber cap for high dustproof.

A8W-RUBBER CAP

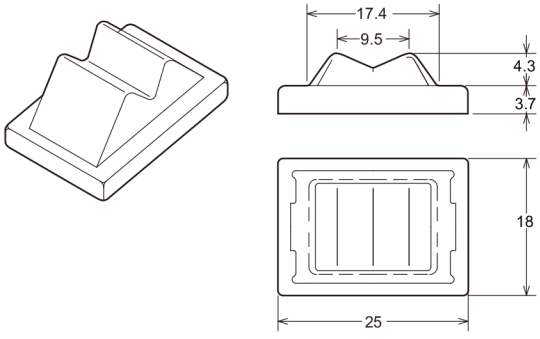

■Precautions

Be sure to read the Safety precautions common to all Rocker Switches for correct use.

- Application examples provided in this document are for reference only. In actual applications, confirm equipment functions and safety before using the product.
- Consult your OMRON representative before using the product under conditions which are not described in the manual or applying the product to nuclear control systems, railroad systems, aviation systems, vehicles, combustion systems, medical equipment, amusement machines, safety equipment, and other systems or equipment that may have a serious influence on lives and property if used improperly. Make sure that the ratings and performance characteristics of the product provide a margin of safety for the system or equipment, and be sure to provide the system or equipment with double safety mechanisms.

Note: Do not use this document to operate the Unit.

OMRON Corporation
Electronic and Mechanical Components Company
Contact: www.omron.com/ecb
Cat. No. A177-E1-05
1014(0207)(O)